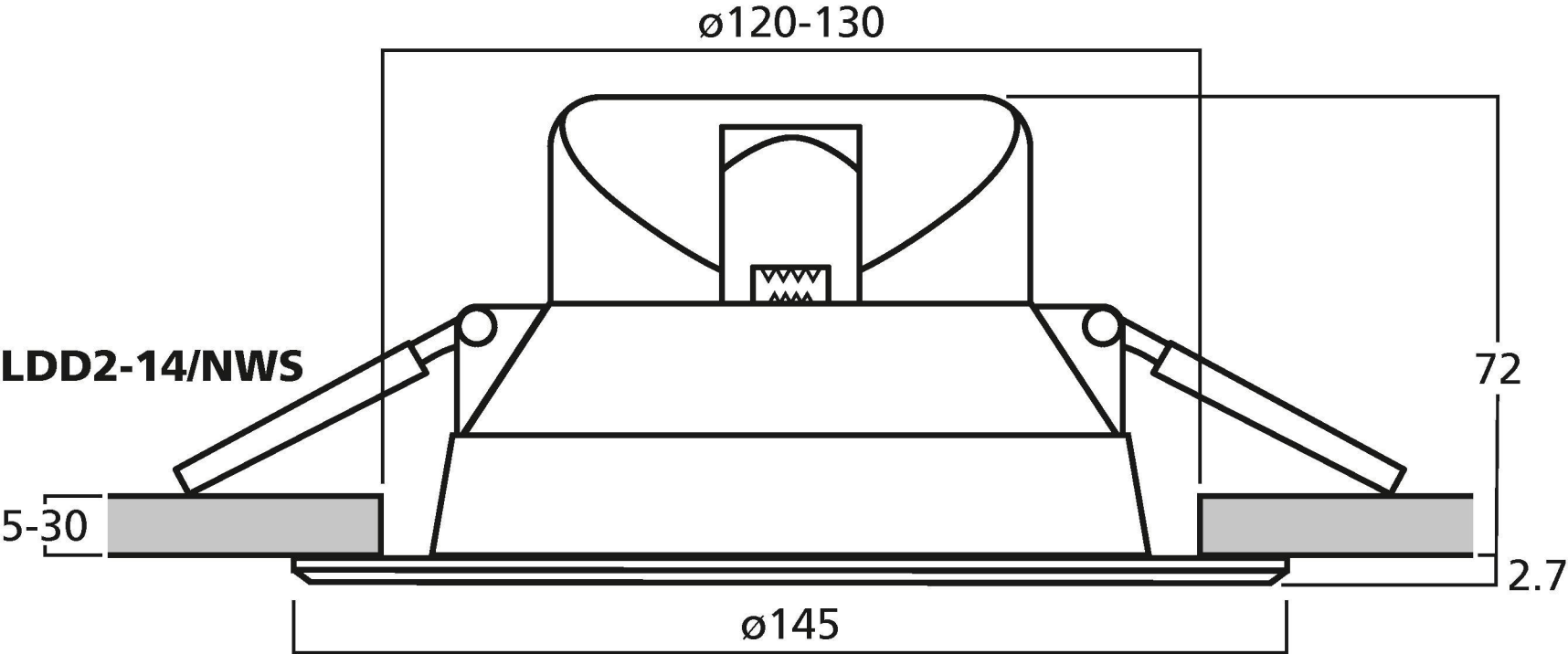
ø120-130
LDD2-14/NWS
72
5-30
2.7
ø145